Mimer SoftRadio

Connecting radios all over the world

Customer Examples

Tetra

Release date 141210

Remote control over the Internet

Bus companies as well as taxi companies often have local dispatch centrals for a geographical area. In the night time when traffic is low they often combine their personnel resources to one central. With SoftRadio it is easy to connect all radio systems into one place, even if they are of different types.

The radios can be connected over a LAN, WAN or through the Internet.

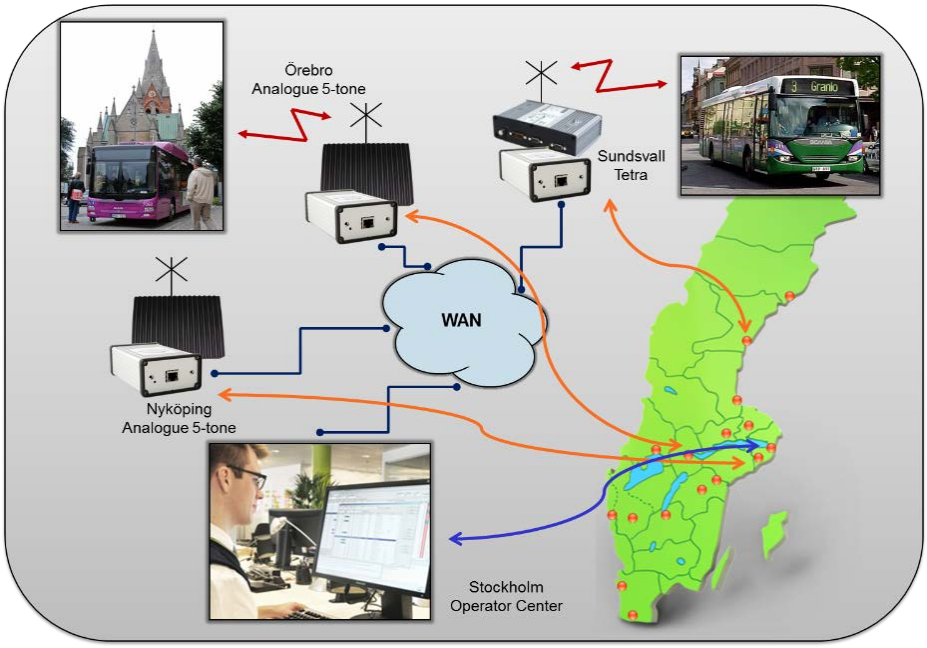

Bus carrier company operating in several cities

In the example above from the Swedish bus entrepreneur Nobina, they have a central dispatch in Stockholm that is in use during nights and weekends. Radios in other parts of the country are connected to the central through their own WAN. At the moment the buses in Sundsvall are using a Tetra network with Sepura terminals. The other two networks are old analogue systems that will be shifted out in the near future, most likely to Tetra.

The operator can remote control radios in each city with the same feeling as if he/she was sitting in front of a local desk mounted radio.

In the daytime local operators use the same SoftRadio system, but only with local control of their own system.

The system is scalable and flexible to different radio techniques.

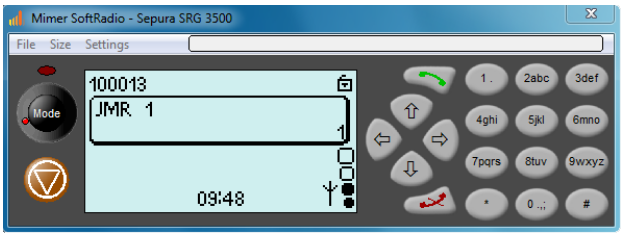

Virtual Control Head of the Sepura Tetra mobile

Local system with many radio types

Oil rigs have large needs for radio communication. They use a number of different systems. For the onboard communication it can be analogue, DMR or Tetra. On top of that are Airband radios and Marine radios.

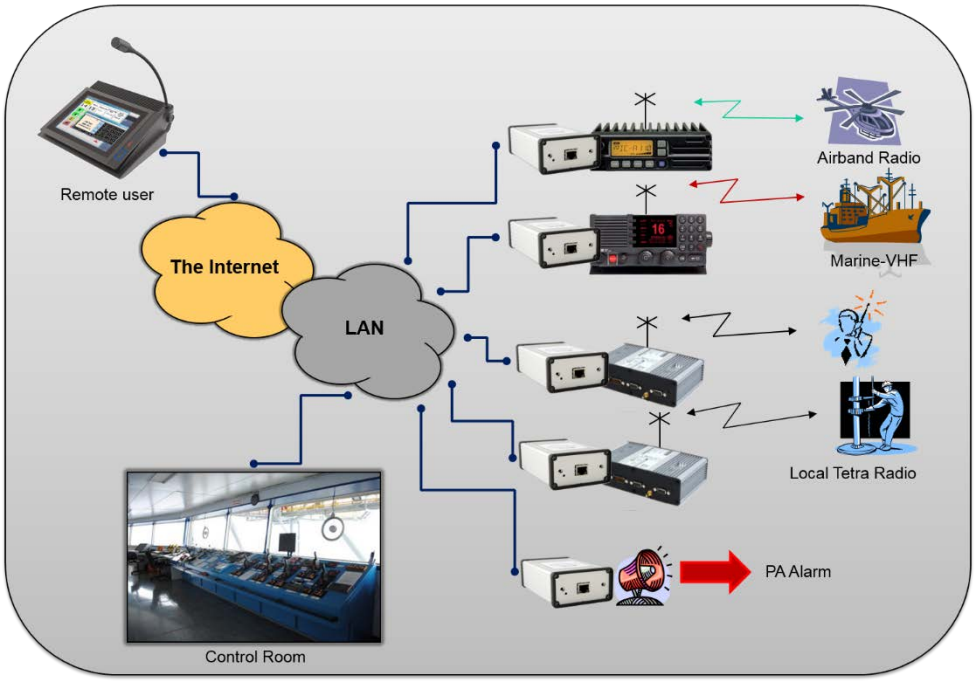

Exampel of oil rig with Tetra as on board communication

Connecting all systems into SoftRadio makes it possible to communicate with all users from every dispatcher. It also makes it possible to do the same from remote users, for example at a second dispatch central on shore.

Typical the onboard communication portables are ATEX radios since the environment is an explosive hazardous area. But there are no Airband radios with ATEX approval. So when personnel on deck needs to talk to an inbound helicopter he can ask a dispatcher to make a cross patch in the SoftRadio system between the onboard radio and the Airband radio, and then use his ATEX approved onboard radio and still talk to the helicopter.

Also PA-systems can be connected to SoftRadio so that dispatchers can both make PA announcements and also listen to the PA calls. A dispatcher that is on shore might have good use to hear what is said on the PA system on the platform. This can also be combined with cross patch so that personnel using hearing protection will hear the PA calls through the radio system instead of the speakers.

Systems on several platforms can also be combined so that they can communicate together.

Tetra system with local radios

A Tetra system has good coverage and you can reach any radio or group in the system from any other radio.

This means that a number of operators can share a number of local Tetra radios, and from those radios communicate with all mobile radios in the system.

Since the local Tetra radios can be operated just as any other radios in the system they can have a fixed talkgroup or they can have a changeable group setting.

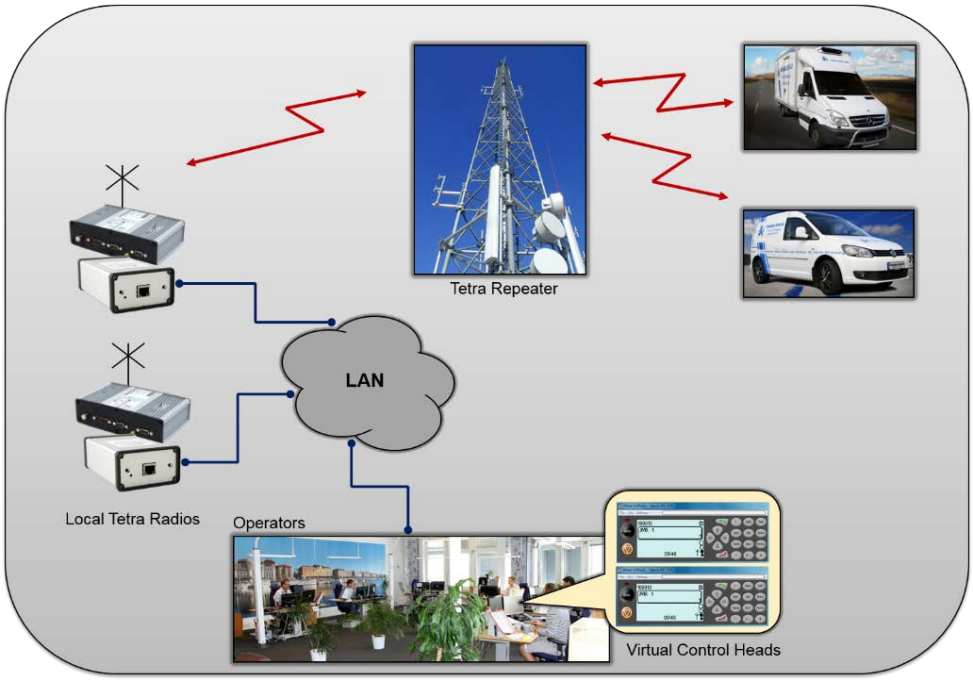

In this example the courier firm uses two local Tetra radios connected on their LAN to six operator positions. All operators can listen to both radios in parallel and all can respond to incoming calls.

With the use of Virtual Control Heads for the radios the operators can make and receive selective calls and respond to alarm calls. They can also use text messaging with preprogrammed texts etc.

The Tetra system could just as well be a nationwide Public Safety net and the local radios be installed on a police station or a fire station.

As an extra precaution the local radios can be installed at a high place so that they can be used in DMR mode if the Tetra net should go down.